CS5.241, CS5.241-C1, CS5.241-S1

24V, 5A, SINGLE PHASE INPUT

POWER SUPPLY

- ? AC 100-120 / 200-240V Auto Select Input
- ? Efficiency up to 90.2%
- ? Width only 32mm
- ? 20% Output Power Reserves
- ? Full Output Power Between -25°C and +60°C
- ? Minimal Inrush Current Surge
- ? 3 Year Warranty

1. GENERAL DESCRIPTION

The Dimension C-Series are cost optimized power supplies without compromi sing quality, reliability and performance. The C-Series is part of the Dimension power supply family, existing alongside the high featured Q-series.

The C series includes all the essential basic functions and the devices have a power reserve of 20%. This extra current may even be used continuously at temperatures up to +45°C. The most important features are the small size, the high efficiency and the wide temperature range.

The Auto-select input makes worldwide installation and usage very simple. Defects or system failures caused by wrongly set switches can not occur.

C-Series
Related products

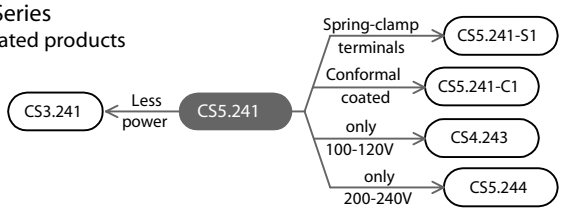

2. SHORT-FORM DATA

Output voltage	DC 24V	
Adjustment range	24 - 28V	
Output current	5 – 4.3A	ambient <60°C
	6 – 5,1A	ambient <45°C
Output power	120W	ambient <60°C
	144W	ambient <45°C
Output ripple	< 50mVpp	20Hz to 20MHz
Input voltage	AC 100-120 / 200-240V	Auto-select Input
Mains frequency	50-60Hz	±6%
AC Input current	typ. 2.05 / 1.23A	at 120 / 230Vac
Power factor	typ. 0.56 / 0.47	at 120 / 230Vac
AC Inrush current	typ. 3A peak	
DC Input	not allowed	
Efficiency	typ. 89.4 / 90.2%	at 120 / 230Vac
Losses	typ. 14.5 / 13.2W	at 120 / 230Vac
Temperature range	-25°C to +70°C	operational
Derating	3W/°C	+60 to +70°C
Hold-up time	typ. 80 / 78ms	at 120 / 230Vac
Dimensions	32x124x117mm	WxHxD

3. ORDER NUMBERS

Power Supply	CS5.241	Standard unit
	CS5.241-C1	Conformal coated PC-boards
	CS5.241-S1	Quick-connect spring-clamp terminals
Accessory	ZM1.WALL	Wall mount bracket
	ZM11.SIDE	Side mount bracket
	YRM2.DIODE	Redundancy module

4. MARKINGS

18WM LISTED IND. CONT. EQ.
UL 508

UL 60950-1

Marine, pending

EMC, LVD

Dec. 2006 / Rev. 1.3 DS-CS5.241-EN
All parameters are specified at 24V, 5A, 230Vac, 25°C ambient and after a 5 minutes run-in time unless otherwise noted.

www.flw.com/puls PULS Distributed By FLW Inc, (800) 576 -6308

INDEX PAGE

1. General Description 1
2. Short-form Data 1
3. Order Numbers 1
4. Markings 1
5. AC-Input 3
6. Input Inrush Current Surge 4
7. Hold-up Time 4
8. Output 5
9. Efficiency and Power Losses 6
10. Functional Diagram 7
11. Reliability 7
12. Front Side and User Elements 8
13. Terminals and Wiring 8
14. EMC 9
15. Environment 11
16. Protection Features 11
17. Safety 12
18. Dielectric Strength 12
19. Approvals 13

INDEX PAGE

20. Fulfilled Standards 13
21. Used Substances 13
22. Physical Dimensions and Weight 14
23. Installation and Operation Instructions 14
24. Accessory 15
25. Application Notes 16
    25.1. Peak Current Capability 16
    25.2. Charging of Batteries 16
    25.3. Back-feeding Loads 16
    25.4. Output Circuit Breakers 17
    25.5. Inductive and Capacitive Loads 17
    25.6. Series Operation 18
    25.7. Parallel Use to Increase Output Power 18
    25.8. Parallel Use for 1+1 Redundancy 18
    25.9. External Input Protection 19
    25.10. Operation on Two Phases 19
    25.11. Use in a Tightly Sealed Enclosure 19
    25.12. Mounting Orientations 20

INTENDED USE

The power supply shall only be installed and put into operation by qualified personnel.

This power supply is designed for installation in an enclosure and is intended for the general use, such as in industrial control, office, communication, and instrumentation equipment. Do not use this device in aircraft, trains and nuclear equipment, where malfunctioning of the power supply may cause severe personal injury or threaten human life.

TERMINOLOGY AND ABREVIATIONS

PE and ⏚ symbol	PE is the abbreviation for Protective Earth and has the same meaning as the symbol ⏚.
Earth, Ground	This document uses the term "earth" which is the same as the U.S. term "ground".
T.b.d.	To be defined, value or description will follow later.
AC 230V	A figure displayed with the AC or DC before the value represents a nominal voltage with standard tolerances (usually ±20%) included. E.g.: DC 12V describes a 12V battery disregarding whether it is full (13.7V) or flat (10V) As long as not otherwise stated, AC 100V and AC 230V parameters are valid at 50Hz and AC 120V parameters are valid at 60Hz mains frequency.
230Vac	A figure with the unit (Vac) at the end is a momentary figure without any additional tolerances included.

DISCLAIMER

The information presented in this document is believed to be accurate and reliable and may change without notice.

www.flw.com/puls PULS Distributed By FLW Inc, (800) 576 -6308

5. AC-INPUT

AC input	nom.	AC 100-120V / 200-240V	auto-select input, TN-, TT-, IT-Mains, see	Fig. 5-1
AC input range		90-132Vac	100-120V range, continuous operation	
		180-264Vac	200-240V range, continuous operation	
		85-90Vac	Short term or with output derating	
		264-300Vac	< 0.5s	
Input frequency	nom.	50 – 60Hz	±6%	

		AC 100V	AC 120V	AC 230V		
Input current	typ.	2.34A	2.05A	1.23A	at 24V, 5A see	Fig. 5-3
Power factor *)	typ.	0.58	0.56	0.47	at 24V, 5A see	Fig. 5-1
Crest factor **)	typ.	2,9	3,1	3,7	at 24V, 5A	
Start-up delay	typ.	740ms	900ms	720ms	see Fig. 5-2	
Rise time	typ.	8ms	8ms	8ms	0mF, 24V, 5A, see	Fig. 5-2
	typ.	25ms	25ms	25ms	5mF, 24V, 5A, see	Fig. 5-2
Turn-on overshoot	max.	400mV	400mV	400mV	see Fig. 5-2	
Turn-on voltage	typ.	75Vac	75Vac	N / A	steady-state value, see	Fig. 5-1
Shut-down voltage	typ.	55Vac	55Vac	N / A	steady-state value, see	Fig. 5-1

*) The power factor is the ratio of the true (or real) power to the apparent power in an AC circuit.
**) The crest factor is the mathematical ratio of the peak value to the RMS value of the input current waveform

Fig. 5-1 Input voltage range

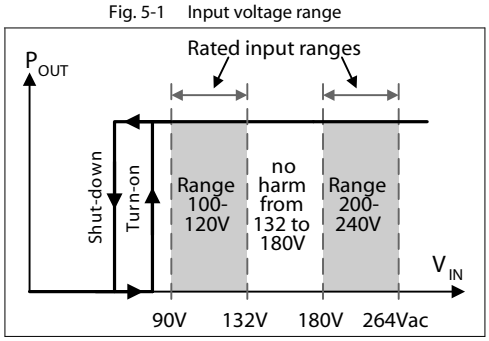

Fig. 5-2 Turn-on behavior, definitions

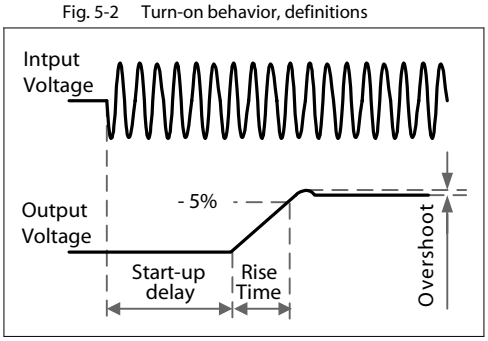

Fig. 5-3 Input current vs. output load

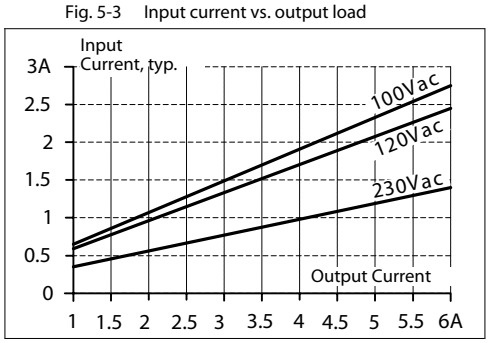

Fig. 5-4 Power Factor vs. output load

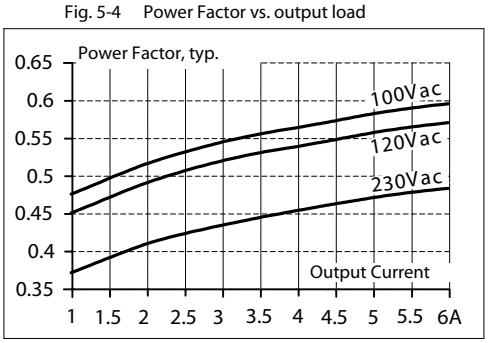

www.flw.com/puls PULS Distributed By FLW Inc, (800) 576 -6308

6. INPUT INRUSH CURRENT SURGE

An active inrush limitation circuitry limits the input inrush current after turn-on of the input voltage.
The charging current into EMI suppression capacitors is disregarded in the first milliseconds after switch-on.

		AC 100V	AC 120V	AC 230V	
Inrush current	max.	10A $_{peak}$	10A $_{peak}$	10A $_{peak}$	-25°C to +70°C
	typ.	3A $_{peak}$	3A $_{peak}$	3A $_{peak}$	-25°C to +70°C
Inrush energy	typ.	1A ^{2}s	1A ^{2}s	1A ^{2}s	-25°C to +70°C

Fig. 6-1 Input inrush current, typical behavior

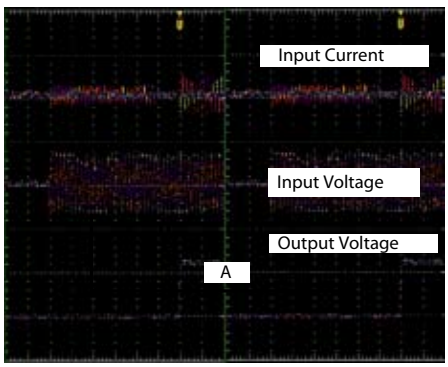

A: Start-up delay = Inrush delay

Input: 230Vac
Output: 24V, 5A
Ambient: 25°C

Upper curve: Input current 10A / DIV
Medium curve: Input voltage 500V / DIV
Lower curve: Output voltage 20V / DIV
Time scale: 100ms / DIV

7. HOLD-UP TIME

		AC 100V	AC 120V	AC 230V		
Hold-up Time	typ.	109ms	165ms	161ms	2,5A, 24V, see	Fig. 7-1
	typ.	50ms	80ms	78ms	5A, 24V, see	Fig. 7-1
	typ.	37ms	62ms	63ms	6A, 24V, see	Fig. 7-1

Fig. 7-1 Hold-up time vs. input voltage

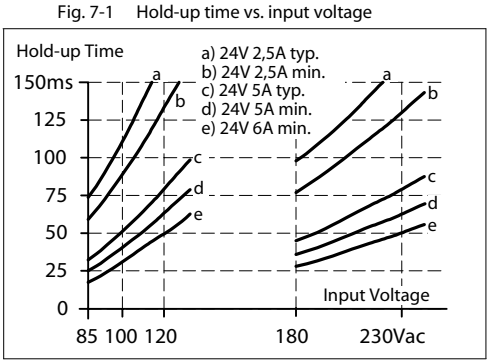

Fig. 7-2 Shut-down behavior, definitions

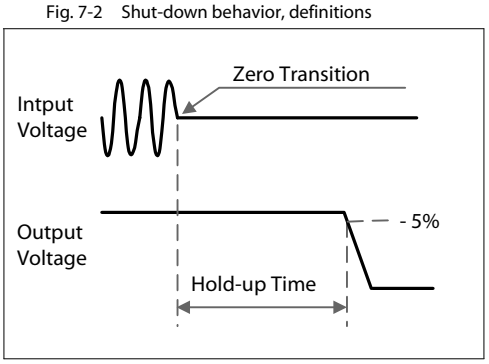

Note: At no load, the hold-up time can be up to several seconds. The green DC-ok lamp is on during this time.

8. OUTPUT

Output voltage	nom.	24V	
Adjustment range	min.	24-28V	guaranteed
	max.	30V	at clockwise end position of potentiometer
Factory setting		24.1V	±0.2%, at full load, cold unit
Line regulation	max.	70mV	90 to 132Vac or 180 to 264Vac
Load regulation	max.	100mV	static value, 0A → 5A → 0A
Ripple and noise voltage	max.	50mVpp	20Hz to 20MHz, 50Ohm
Output capacitance	typ.	1 800µF	
Output current	nom.	6A U)	at 24V, ambient < 45°C, see Fig. 8-1
	nom.	5A	at 24V, ambient < 60°C, see Fig. 8-1
	nom.	5.1A U)	at 28V, ambient < 45°C, see Fig. 8-1
	nom.	4.3A	at 28V, ambient < 60°C, see Fig. 8-1
Output power	nom.	144W U)	ambient < 45°C
	nom.	120W	ambient < 60°C
Short-circuit current	min.	10A	load impedance 200mOhm, see Fig. 8-1
	max.	14A	load impedance 200mOhm, see Fig. 8-1

U) The unit may respond with a thermal shut-down when continuously loaded with more than 120W and operated with a mains voltage of 100V or below.

Fig. 8-1 Output voltage vs. output current, typ.

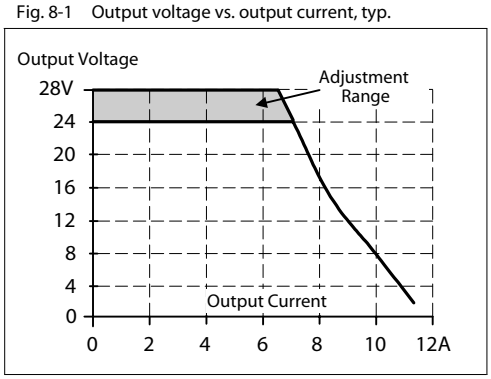

Peak current capability (up to several ms)

The power supply can deliver a peak current which is higher than the specified short term current. This helps to start current demanding loads or to safely operate subsequent circuit breakers.

The extra current is supplied by the output capacitors inside the power supply. During this event, the capacitors will be discharged and causes a voltage dip on the output. Detailed curves can be found in chapter 25.1.

Peak current voltage dips	typ.	from 24V to 18.5V	at 10A for 50ms, resistive load
	typ.	from 24V to 22V	at 25A for 2ms, resistive load
	typ.	from 24V to 20V	at 25A for 5ms, resistive load

www.flw.com/puls PULS Distributed By FLW Inc, (800) 576 -6308

9. EFFICIENCY AND POWER LOSSES

		AC 100V	AC 120V	AC 230V	
Efficiency	typ.	88.8%	89.4%	90.2%	5A, 24V
Power losses	typ.	1.9W	2.0W	1.7W	0A
	typ.	9.1W	8.8W	8.2W	2.5A, 24V
	typ.	15.3W	14.5W	13.2W	5A, 24V
	typ.	19.4W	18.2W	16.1W	6A, 24V

Fig. 9-1 Efficiency vs. output current at 24V

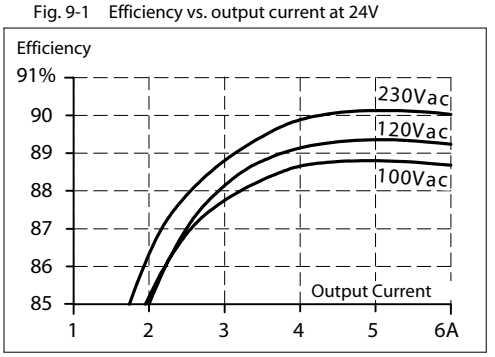

Fig. 9-2 Losses vs. output current at 24V

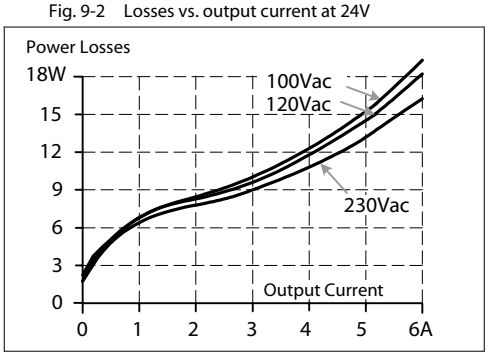

Fig. 9-3 Efficiency vs. input voltage, 24V, 5A

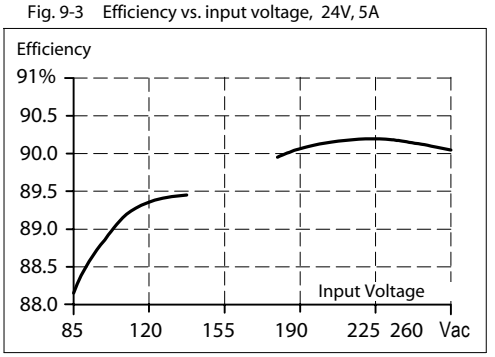

Fig. 9-4 Losses vs. input voltage, 24V, 5A

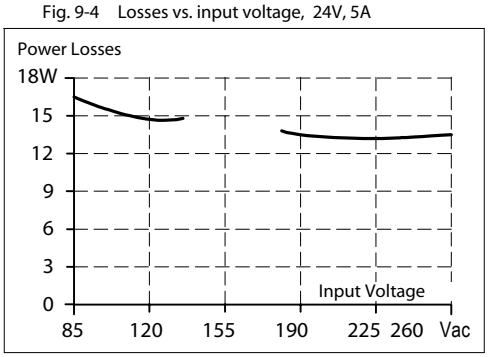

www.flw.com/puls PULS Distributed By FLW Inc, (800) 576 -6308

10. FUNCTIONAL DIAGRAM

Fig. 10-1 Functional diagram

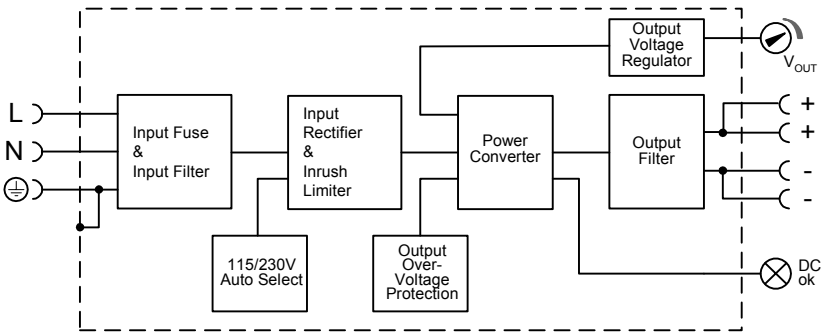

11. RELIABILITY

		AC 100V	AC 120V	AC 230V	
Lifetime expectancy	min.	52 000h	58 000h	72 000h	40°C, 24V, 5A
	min.	27 000h	34 000h	42 000h	40°C, 24V, 6A
	min.	135 000h	128 000h	144 000h	40°C, 24V, 2,5A
	min.	142 000h	15 years	15 years	25°C, 24V, 5A
MTBF SN 29500, IEC 61709		638 000h	661 000h	869 000h	40°C, 24V, 5A
		542 000h	562 000h	739 000h	40°C, 24V, 6A
		1 077 000h	1 111 000h	1 495 000h	25°C, 24V, 5A
MTBF MIL HDBK 217F		552 000h	546 000h	574 000h	40°C, 24V, 5A, Ground Benign GB40
		497 000h	491 000h	517 000h	40°C, 24V, 6A, Ground Benign GB40
		788 000h	775 000h	800 000h	25°C, 24V, 5A, Ground Benign GB25

The Lifetime expectancy shown in the table indicates the operating hours (service life) and is determined by the lifetime expectancy of the built-in electrolytic capacitors.

Lifetime expectancy is specified in operational hours. Lifetime expectancy is calculated according to the capacitor's manufacturer specification. The prediction model allows a calculation of up to 15 years from date of shipment.

MTBF stands for Mean Time Between Failure, which is calculated according to statistical device failures, and indicates reliability of a device. It is the statistical representation of the likelihood of a unit to fail and does not necessarily represent the life of a product.

www.flw.com/puls PULS Distributed By FLW Inc, (800) 576 -6308

12. FRONT SIDE AND USER ELEMENTS

Fig. 12-1 Front side

Output Terminals
Screw terminals
(Spring-clamp terminals on the CS5.241-S1)

+ Positive output
- Negative (return) output
Dual pins per pole

Output voltage potentiometer
Open the flap to tune the output voltage.
Factory set: 24.1V

DC-on lamp (green)
On when the voltage on the output terminals is > 21 V

Input Terminals
Screw terminals
(Spring-clamp terminals on the CS5.241-S1)
N … Neutral input
L … Line (hot) input
⏚ ... PE (Protective Earth) input

13. TERMINALS AND WIRING

Type	Screw terminals (CS5.241, CS5.241-C1),); Spring-clamp terminals (CS5.241-S1)
Solid wire	0.5-6mm ^{2}
Stranded wire	0.5-4mm ^{2}
American wire gauge	20-10 AWG
Ferrules	allowed, but not required
Wire stripping length	7mm / 0.275inch
Screwdriver	3.5mm slotted or Pozidriv e No 2 (only for screw terminals)
Recommended tightening torque	0.8Nm, 7lb.in (only for screw terminals)

Instructions:

a) Use appropriate copper cables that are designed for an operating temperature of:
60°C for ambient up to 45°C and
75°C for ambient up to 60°C minimum.

b) Follow national installation codes and installation regulations!

c) Ensure that all strands of a strande d wire enter the terminal connection!

d) Up to two stranded wires with the same cross secti on are permitted in one connect ion point (except PE wire).

e) Do not use the unit without PE connection.

www.flw.com/puls PULS Distributed By FLW Inc, (800) 576 -6308

14. EMC

The CE mark is in conformance with EMC guideline 89/336/EEC and 93/68/EEC and the low-voltage directive (LVD) 73/23/EWG. A detailed EMC Report is available on request.

EMC Immunity	EN 61000-6-2 EN 61000-6-1		Generic standards	
Electrostatic discharge	EN 61000-4-2	Contact discharge Air discharge	8kV 15kV	Criterion A Criterion A
Electromagnetic RF field	EN 6100 0-4-3	80MHz-1GHz	10V/m	Criterion A
Fast transients (Burst)	EN 61000-4-4	Input lines Output lines	4kV 2kV	Criterion A Criterion A
Surge voltage on input	EN 61000-4-5	L → N N / L → PE	2kV 4kV	Criterion A Criterion A
Surge voltage on output	EN 61000-4-5	+ → - + / - → PE	500V 500V	Criterion A Criterion A
Conducted disturbance	EN 61000-4-6	0,15-80MHz	10V	Criterion A
Mains voltage dips	EN 61000-4-11	0% of 100Vac 40% of 100Vac 70% of 100Vac 0% of 200Vac 40% of 200Vac 70% of 200Vac	0Vac, 20ms 40Vac, 200ms 70Vac, 500ms 0Vac, 20ms 80Vac, 200ms 140Vac, 500ms	Criterion A Criterion C Criterion A Criterion A Criterion C Criterion A
Voltage interruptions	EN 61000-4-11		0Vac, 5000ms	Criterion C
Input voltage swells	PULS internal standard		300Vac, 500ms	Criterion A
Powerful transients	VDE 0160	over entire load range	750V, 1.3ms	Criterion A

Criterions:
A: Power supply shows normal operation behavior within the defined limits.
C: Temporary loss of function is possible. Power supply might shut-down and restarts by itself. No damages or hazards for the power supply occur.

Switching frequency	175kHz to 225kHz	input voltage dependent 24V, 2.5A
	100kHz to 130kHz	input voltage dependent 24V, 5A

www.flw.com/puls PULS Distributed By FLW Inc, (800) 576 -6308

EMC Emission	EN 61000-6-4	Generic standards
Conducted emission	EN 55011, EN 55022, FCC Part 15, CISPR 11, CISPR 22	Class B, input lines
	EN 55022	Class A, output lines
Radiated emission	EN 55011, EN 55022	Class B
Harmonic input current	EN 61000-3-2	>2.7A output current not fulfilled
Voltage fluctuations, flicker	EN 61000-3-3	fulfilled

This device complies with FCC Part 15 rules.
Operation is subjected to following two conditions: (1) this device may not cause harmful interference, and (2) this device must accept any interference received, including interference that may cause undesired operation.

Above an average output current of 2.7A, the harmonic current standard EN61000-3-2 is not fulfilled.

Please note:

A power supply has to comply with EN 61000-3-2 (Standard for harmonic input current) when:
1) the end-device is used within the European Union and
2) the end-device is connected to a public mains supply with a nominal voltage ? 220Vac and
3) the power supply is:
- fitted in an end-device with an average input power in excess of 75W or
- fitted in an end-device with a continuous input power in excess of 75W or
- part of a lighting system.

Exceptions:
End-devices for professional applications with an input power > 1000W do not need to fulfill EN 61000-3-2.

Comments:
- The average input power must be determined in accordance with EN 61000-3-2.
- Industrial mains supplies with their own transformer are considered to be “non-public”.
- Where individual self-contained items of equipment are installed in a rack or case (e.g. devices connected in parallel), they are regarded as being individually connected to the mains supply. The rack or case need not be tested as a whole. Alternatively it is also permitted to assess the whole rack or case. This is recommended for devices used in professional applications with an input power greater than 1000W.

www.flw.com/puls PULS Distributed By FLW Inc, (800) 576 -6308

15. ENVIRONMENT

Operational temperature	-25°C to +70°C (-13°F to 158°F)	reduce output power according Fig. 15-1
Output de-rating	1.6W/°C 3W/°C	45-60°C (113°F to 140°F), 60-70°C (140°F to 158°F),
Storage temperature	-40 to +85°C (-40°F to 185°F)	storage and transportation
Humidity	5 to 95% r.H.	IEC 60068-2-30 Do not energize while condensation is present
Vibration sinusoidal	2-17.8Hz: ±1.6mm; 17.8-500Hz: 2g 2 hours / axis	IEC 60068-2-6
Shock	30g 6ms, 20g 11ms 3 bumps / direction, 18 bumps in total	IEC 60068-2-27
Altitude	0 to 6000m (0 to 20 000ft)	Reduce output power or ambient temperature above 2000m sea level.
Output de-rating (for altitude)	7.5W/ 1000m or 5°C/1000m	above 2000m (6500ft), see Fig. 15-2
Over-voltage category	III II	EN 50178, altitudes up to 2000m Altitudes from 2000m to 6000m
Degree of pollution	2	EN 50178, not conductive

Fig. 15-1 Output current vs. ambient temp.,

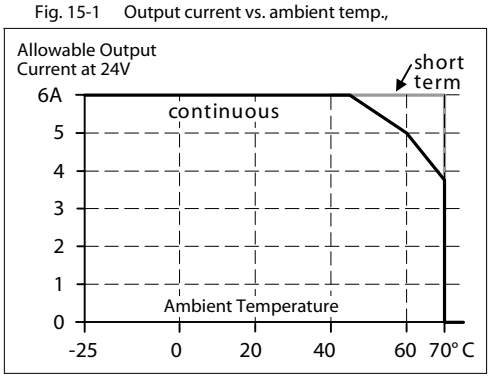

Fig. 15-2 Output current vs. altitude, 24V

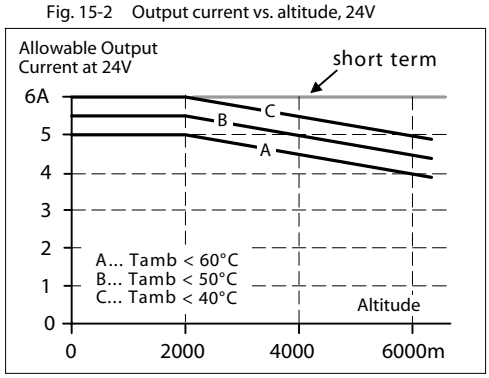

The ambient temperature is defined 2cm below the unit.

16. PROTECTION FEATURES

Output protection	Electronically protected against overload, no-load and short-circuits	
Output over-voltage protection	typ. 35Vdc max. 39Vdc	In case of an internal power supply defect, a redundant circuitry limits the maximum output voltage. The output shuts down and automatically attempts to restart.
Output over-current protection	electronically limited	see Fig. 8-1
Degree of protection	IP 20	EN/IEC 60529
Penetration protection	> 3.5mm	e.g. screws, small parts
Over-temperature protection	yes	output shut-down with automatic restart
Input transient protection	MOV	Metal Oxide Varistor
Internal input fuse	T4A H.B.C.	not user replaceable

Note: In case of a protection event, audible noise may occur.

www.flw.com/puls PULS Distributed By FLW Inc, (800) 576 -6308

17. SAFETY

Input / output separation	SELV	IEC/EN 60950-1
	PELV	EN 60204-1, EN 50178, IEC 60364-4-41
	double or reinforced insulation	
Class of protection	I	PE (Protective Earth) connection required
Isolation resistance	> 5MOhm	input to output, 500Vdc
PE resistance	< 0.1Ohm	between housing and PE terminal
Touch current (leakage current)	typ. 0.24mA	100Vac, 50Hz, TN mains
	typ. 0.35mA	120Vac, 60Hz, TN mains
	typ. 0.40mA	230Vac, 50Hz, TN mains
	< 0.36mA	110Vac, 50Hz, TN mains
	< 0.53mA	132Vac, 60Hz, TN mains
	< 0.60mA	264Vac, 50Hz, TN mains

18. DIELECTRIC STRENGTH

Fig. 18-1 Dielectric strength

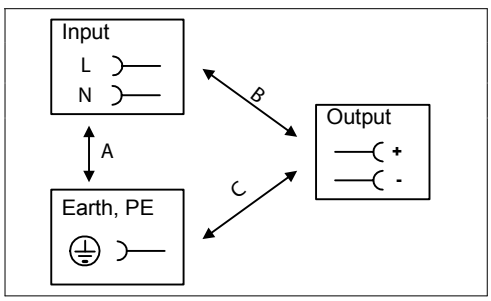

		A	B	C
Type test	60s	2500Vac	3000Vac	500Vac
Factory test	5s	2500Vac	2500Vac	500Vac
Field test	5s	2000Vac	2000Vac	500Vac

Type tests and factory tests:
Conducted by the manufacturer. Do not repeat test in field!
Rules for field test:
Use appropriate test equipment which applies the voltage with a slow ramp! Connect L and N together as well as all output poles.

The output voltage is floating and has no ohmic connection to ground.

To fulfill the PELV requirements according to EN60204-1 § 6.4.1, we recommend that either the + pole, the – pole or any other part of the output circuit shall be connected to the protective earth system. This helps to avoid situations in which a load starts unexpectedly or can not be switched off any more when unnoticed earth faults occur.

www.flw.com/puls PULS Distributed By FLW Inc, (800) 576 -6308

19. APPROVALS

IEC 60950-1	IECEE CB SCHEME	CB Scheme, Information Technology Equipment
UL 508	18WM LISTED IND. CONT. EQ.	LISTED as Industrial Control Equipment E198865
UL 60950-1	c UL us	RECOGNIZED E137006 recognized for the use in U.S.A. (UL 60950-1) and Canada (C22.2 No. 60950) Information Technology Equipment, Level 3
Marine pending	GL ABS	GL (Germanischer Lloyd) classified and ABS (American Bureau for Shipping) PDA for marine and offshore applications. Environmental category: C, EMC2

20. FULFILLED STANDARDS

EN 61558-2-17	Safety of Power Transformers
EN/IEC 60204-1	Safety of Electrical Equipment of Machines
EN/IEC 61131-2	Programmable Controllers
EN 50178	Electronic Equipment in Power Installations

21. USED SUBSTANCES

The unit does not release any silicone and is suitable for the use in paint shops.

Electrolytic capacitors included in this unit do not use electrolytes such as Quaternary Ammonium Salt Systems.

Plastic housings and other molded plastic materials are free of halogens, wires and cables are not PVC insulated.

The production material within our production does not include following toxic chemicals:
Polychlorized Biphenyl (PCB), Polychlorized Terphenyl (PCB), Pentachlorophenol (PCP), Polychlorinated naphthalene (PCN), Polybrom Biphenyl (PBB), Polybrom Bipheny-oxyd (PBO), Polybrominated Diphenylether (PBDE), Polychlorinated Diphenylether (PCDE), Polydibromphenyl Oxyd (PBDO), Cadmium, Asbest, Mercury, Silicia

www.flw.com/puls PULS Distributed By FLW Inc, (800) 576 -6308

22. PHYSICAL DIMENSIONS AND WEIGHT

Weight	500g / 1.1lb
DIN-Rail	Use 35mm DIN-rails according to EN 60715 or EN 50022 with a height of 7.5 or 15mm. The DIN-rail height must be added to the depth (117mm) to calculate the total required installation depth.

Electronic files with mechanical data can be downloaded at www.pulspower.com

Fig. 22-1 Front view

Fig. 22-2 Side view

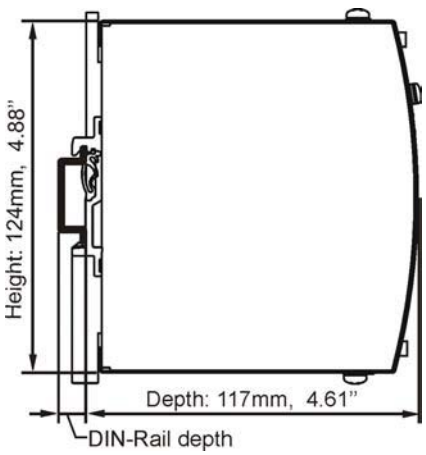

23. INSTALLATION AND OPERATION INSTRUCTIONS

Mounting Orientation:
Output terminal must be located on top and input terminal on the bottom. For other orientations see chapter 25.12.

Cooling:
Convection cooled, no forced cooling required. Do not cover ventilation grid (e.g. cable conduits) by more than 30%!

Installation clearances:
40mm on top, 20mm on the bottom, 5mm on the left and right side are recommended when loaded permanently with full power. In case the adjacent device is a heat source, 15mm clearance are recommended.

Risk of electrical shock, fire, personal injury or death!
Do not use the unit without proper earth connection (Protective Earth). Use the pin on the terminal block for earth connection and not one of the screws on the housing.
Turn power off before working on the power supply. Protect against inadvertent re-powering.
Make sure the wiring is correct by following all local and national codes.
Do not open, modify or repair the unit.
Use caution to prevent any foreign objects from entering into the housing.
Do not use in wet locations or in areas where moisture or condensation can be expected.

Service parts:
The unit does not contain any service parts. The tripping of an internal fuse is caused by an internal defect. If damage or malfunctioning should occur during operation, immediately turn power off and send unit to factory for inspection!

www.flw.com/puls PULS Distributed By FLW Inc, (800) 576 -6308

24. ACCESSORY

ZM1.WALL Wall mounting bracket

This bracket is used to mount Dimension units onto a flat surface without utilizing a DIN-Rail. The two aluminum brackets and the black plastic slider of the unit have to be detached, so that the two steel brackets can be mounted.

Fig. 24-1 ZM1.WALL Wall Mounting Bracket

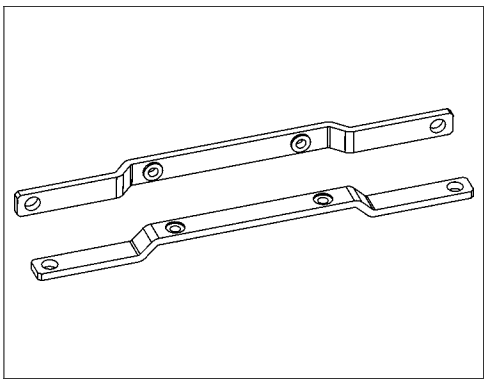

Fig. 24-2 Assembled Wall Mounting Bracket

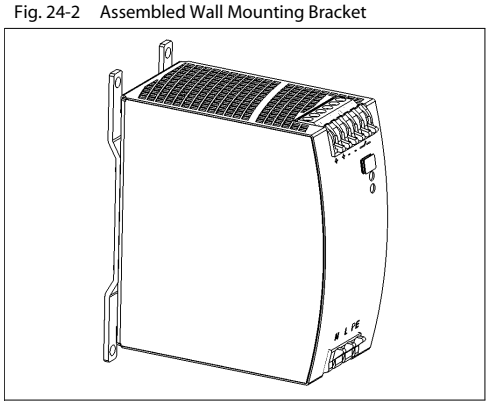

ZM11.SIDE Side mounting bracket

This bracket is used to mount Dimension units sideways with or without utilizing a DIN-Rail. The two aluminum brackets and the black plastic slider of the unit have to be detached, so that the steel brackets can be mounted.

For sideway DIN-rail mounting, the removed aluminum brackets and the black plastic slider need to be mounted on the steel bracket.

Fig. 24-3 ZM13.SIDE Side Mounting Bracket

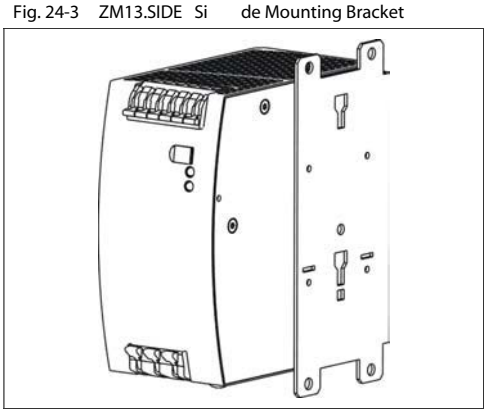

Fig. 24-4 Side Mounting with DIN-rail brackets

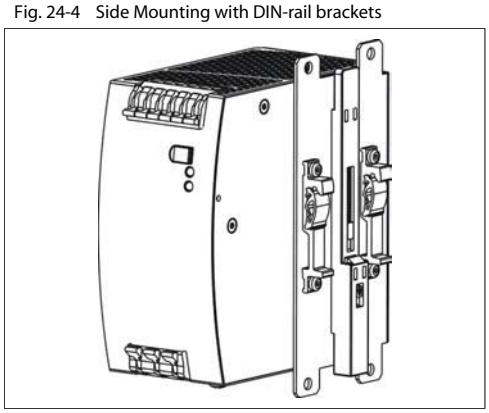

25. APPLICATION NOTES

25.1. PEAK CURRENT CAPABILITY

Solenoids, contactors and pneumatic modules often have a steady state coil and a pick-up coil. The inrush current demand of the pick-up coil is several times higher than the steady state current and usually exceeds the nominal output current (including the PowerBoost) The same situation applies, when starting a capacitive load.

Branch circuits are often protected with circuit breakers or fuses. In case of a short or an overload in the branch circuit, the fuse needs a certain amount of over-current to trip or to blow. The peak current capability ensures the safe operation of subsequent circuit breakers.

Assuming the input voltage is turned on before such an event, the built-in large sized output capacitors inside the power supply can deliver extra current. Discharging this capacitor causes a voltage dip on the output. The following two examples show typical voltage dips:

Fig. 25-1 Peak load 10A for 50ms, typ.

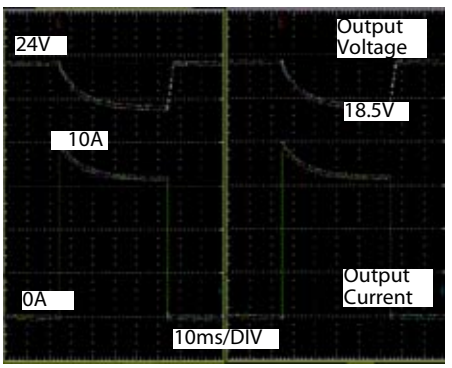

Peak load 10A (resistive) for 50ms
Output voltage dips from 24V to 18.5V.

Fig. 25-2 Peak load 25A for 5ms, typ.

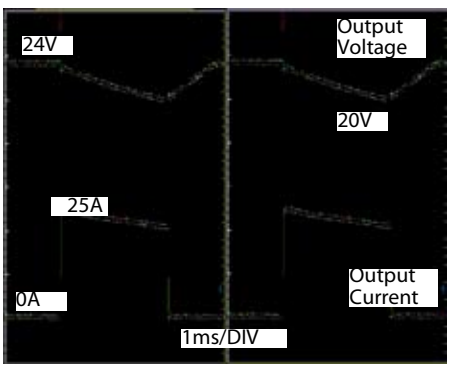

Peak load 25A (resistive) for 5ms
Output voltage dips from 24V to 20V.

25.2. CHARGING OF BATTERIES

The power supply shall not be used to charge batteries. Choose Q-Series for charging batteries.

25.3. BACK-FEEDING LOADS

Loads such as decelerating motors and inductors can feed voltage back to the power supply. This feature is also called return voltage immunity or resistance against Back- E.M.F. (E_lectro M_agnetic F_orce).

This power supply is resistant and does not show malfunctioning when a load feeds back voltage to the power supply. It does not matter, whether the power supply is on or off.

The maximum allowed feed back voltage is 35Vdc. The absorbing energy can be calculated according to the built-in large sized output capacitor which is specified in chapter 8.

www.flw.com/puls PULS Distributed By FLW Inc, (800) 576 -6308

25.4. OUTPUT CIRCUIT BREAKERS

Standard miniature circuit breakers (MCBs) can be used for branch protection. Ensure that the MCB is rated for DC voltage, too. The following tests show which circuit breakers the power supply typically trips.

Circuit breakers have huge tolerances in their tripping behavior. Therefore, these typical tests can only be used as a recommendation or for comparing two different power supplies. Furthermore, the loop impedance has a major influence on whether a breaker trips or not. Two tests were performed, representing typical situations:

Test 1: Short circuit with S1 on the power supply end of the cable (loop impedance approx. 20mOhm)

Fig. 25-3 Branch protectors, test circuit 1

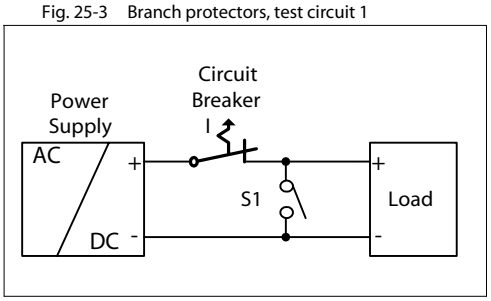

Parameters:

Input voltage: 230Vac, load current: 0A

The following circuit breaker tripped during the test:

A - or Z - Characteristic:: equal or smaller 8A
B - Characteristic: no tripping ≥ 6A
no breaker available < 6A
C - Characteristic: equal or smaller 4A

Test 2: Short circuit with S1 on the load end (additional impedance included; represents longer load wire length).

Fig. 25-4 Branch protectors, test circuit 2

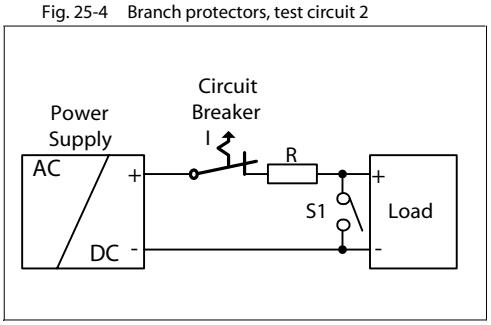

Parameters:

Input voltage: 230Vac, load current: 0A

The following circuit breaker tripped during the test:

A - or Z - Characteristic:: ≤ 6A and R= 180mOhm
B - Characteristic: no tripping ≥ 6A
no breaker available < 6A
C - Characteristic: ≤ 3A and R= 270mOhm

What does this resistance mean in wire length?

	0.5mm²	0.7mm²	1.0mm²	1.5mm²	2.5mm²	4.0mm²
180mOhm	5.0m	7.0m	10m	15m	25m	40m
270mOhm	7.5m	10.5m	15m	23m	38m	60m

Example:
Which wire gauge must be used to trip a C-Characteristic circuit breaker with a rating of 3A? The load wire length is 21m.

Answer: A 3A C-Characteristic circuit breaker requires a loop impedance of less than 270mOhm (test results). The wire length table shows that up to 23m wire with a cross section of 1.5mm² are below 270mOhm. A wire not smaller than 1.5mm² shall be used.

25.5. INDUCTIVE AND CAPACITIVE LOADS

The unit is designed to supply any kind of load, including unlimited capacitive and inductive loads.

www.flw.com/puls PULS Distributed By FLW Inc, (800) 576 -6308

25.6. SERIES OPERATION

The power supply can be put in series to increase the output voltage.

Fig. 25-5 Schematic for series operation

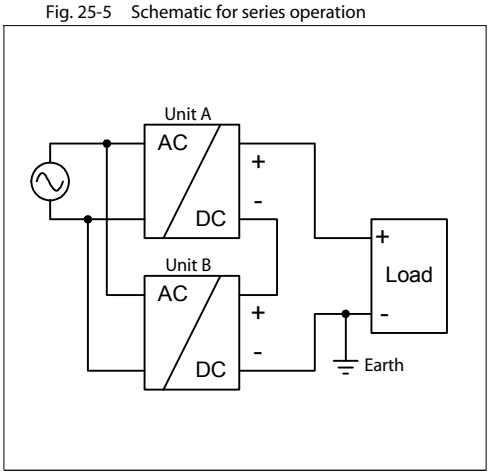

Instructions for use in series:

a) It is possible to connect as many units in series as needed, providing the sum of the output voltage does not exceed 150Vdc.
b) Voltages with a potential above 60Vdc are not SELV any more and can be dangerous. Such voltages must be installed with a protection against touching.
c) For serial operation use power supplies of the same type.
d) Earthing of the output is required when the sum of the output voltage is above 60Vdc.
e) Keep an installation clearance of 15mm (left/right) between two power supplies and avoid installing the power supplies on top of each other.

Note: Avoid return voltage (e.g. from a decelerating motor or battery) which is applied to the output terminals.

25.7. PARALLEL USE TO INCREASE OUTPUT POWER

The power supply shall not be used in parallel to increase the output power.

25.8. PARALLEL USE FOR 1+1 REDUNDANCY

Power supplies can be paralleled for 1+1 redundancy to gain a higher system availability. Redundant systems require a certain amount of extra power to support the load in case one power supply unit fails. The simplest way is to put two C-Series power supplies in parallel. In case one power supply unit fails, the other one is automatically able to support the load current without any interruption. This simple way to build a redundant system has two major disadvantages:

- The faulty power supply can not be recognized. The green LED will still be on since it is reverse-powered from the other power supply.
- It does not cover failures such as an internal short circuit in the secondary side of the power supply. In such a - virtually nearly impossible - case, the defective unit becomes a load for the other power supplies and the output voltage can not be maintained any more.

This can only be avoided by utilizing decoupling diodes which are included in the decoupling module YR2.DIODE or redundancy module YRM2.DIODE.

Recommendations for building redundant power systems:

a) Use separate input fuses for each power supply.
b) Monitor the individual power supply units. A DC-ok lamp and a DC-ok contact is included in the redundancy module YRM2.DIODE. This feature reports a faulty unit.
c) When possible, connect each power supply to different phases or circuits.

www.flw.com/puls PULS Distributed By FLW Inc, (800) 576 -6308

25.9. EXTERNAL INPUT PROTECTION

The unit is tested and approved for branch circuits up to 20A. External protection is only required if the supplying branch has an ampacity greater than this. In some countries local regulations might apply. Check also local codes and local requirements.

If an external fuse is necessary or utilized, a minimum value is required to avoid undesired tripping of the fuse.

		B-Characteristic	C-Characteristic
Ampacity	max.	20A	20A
	min.	10A	6A

25.10. OPERATION ON TWO PHASES

Fig. 25-6 Schematic for two phase operation

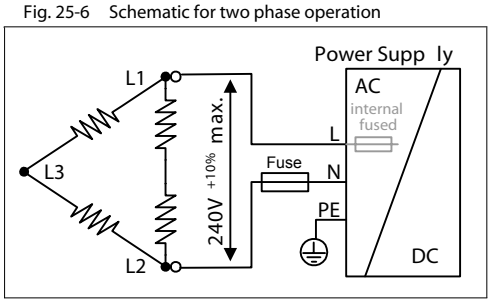

Instructions for two phase operation:

a) A phase to phase connection is allowed as long as the supplying voltage is below 240V +10%.

b) Use a fuse or a circuit breaker to protect the N input. The N input is internally not protected and is in this case connected to a hot wire.

Appropriate fuses or circuit breakers are specified in section 25.9 "External Input Protection".

25.11. USE IN A TIGHTLY SEALED ENCLOSURE

When the power supply is installed in a tightly sealed enclosure, the temperature inside the enclosure will be higher than outside. The inside temperature defines the ambient temperature for the power supply.

Results from such an installation:

Power supply is placed in the middle of the box, no other heat producer inside the box

Enclosure: Rittal Type IP66 Box PK 9516 100, plastic, 110x180x165mm
Load: 24V, 4A; (=80%) load is placed outside the box
Input: 230Vac
Temperature inside the box: 44.3°C (in the middle of the right side of the power supply with a distance of 2cm)
Temperature outside the box: 23.3°C
Temperature rise: 21K

www.flw.com/puls PULS Distributed By FLW Inc, (800) 576 -6308

25.12.MOUNTING ORIENTATIONS

Mounting orientations other than input terminals on the bottom and output on the top require a reduction in continuous output power or a limitation in the max. allowed ambient temperature. The amount of reduction influences the lifetime expectancy of the power supply. Therefore, two different derating curves for continuous operation can be found below:

Curve A1 Recommended output current.
Curve A2 Max allowed output current (results approx. in half the lifetime expectancy of A1).

Fig. 25-7
Mounting Orientation A
Standard Orientation

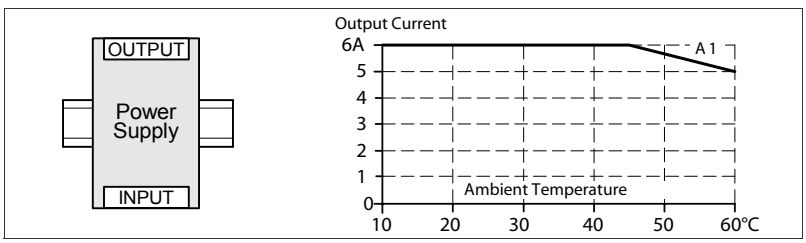

Fig. 25-8
Mounting Orientation B
(Upside down)

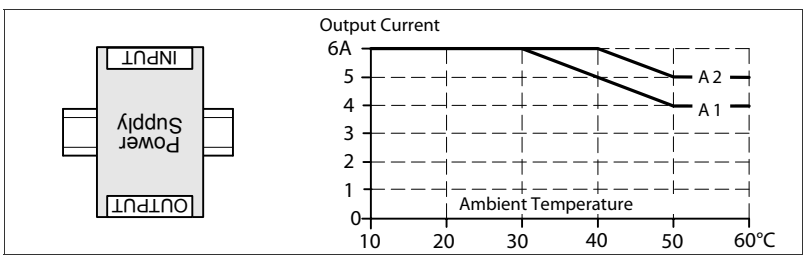

Fig. 25-9
Mounting Orientation C
(Table-top mounting)

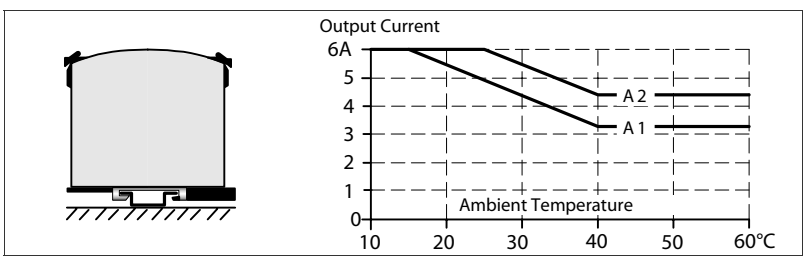

Fig. 25-10
Mounting Orientation D
(Horizontal cw)

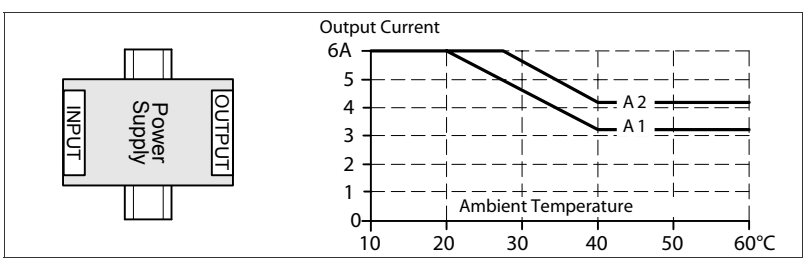

Fig. 25-11
Mounting Orientation E
(Horizontal ccw)

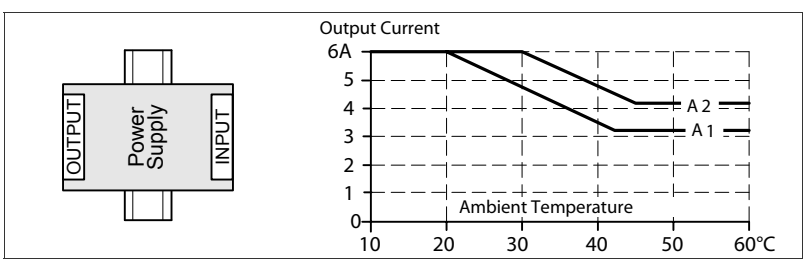

www.flw.com/puls PULS Distributed By FLW Inc, (800) 576 -6308